AIRLINE™ LOUVERS

AC6D35HAFC

STANDARD MATERIALS AND CONSTRUCTION

FRAME: .081" thk. (nominal) extruded aluminum, 6063-T52/T6 alloy. Channel type frame.

BLADES: Stationary blades made from .081" thk. (nominal) extruded aluminum 6063-T52/T6 alloy. Adjustable Airfoil blades made from .125" thk. (nominal) extruded aluminum 6063-T52/T6 alloy. Blades are approximately 4½" on centers.

LOUVER FACE: Full width sill with head and blades contained within jambs. Concealed mullion with continuous length stationary blade.

LINKAGE: Extruded aluminum, concealed in the channel out of the airstream. The pivots, which rotate in Celcon bearings, are .50" dia. Zinc plated machined steel. The pivot is locked to the 5⁄16" dia. aluminum linkage rod by a ¼ - 20 set screw with an epoxy locking patch.

BEARINGS: Celcon bearing material, so there will be no metal to metal friction.

SHAFTS: .50" dia. aluminum "Pin-Lock" rod.

SEALS: Extruded silicone rubber seals at blade edge. Foam on bottom blade and polycarbonate jamb seals. Stainless steel at jamb required on painted louvers.

SCREEN: (When indicated, in a removable frame) ½" flattened aluminum, .051" thk.,
-or- Insect screen 18⁄16 aluminum mesh, .011" dia.,
-or- ½" sq. mesh intermediate double crimped aluminum wire, .063" dia.

FINISH: Mill.

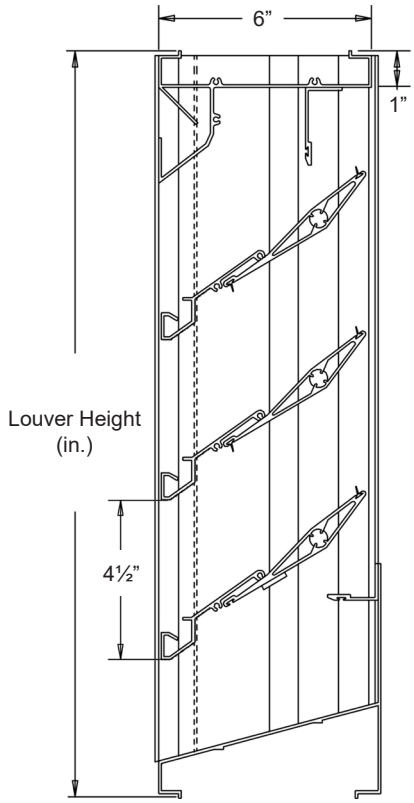

Not to scale.

OPTIONS

Finishes - Enamels, Epoxies, etc.
Other screens also available.
Actuators - Electric, Pneumatic, Manual, etc.

NOTES

1. ½" nominal deduction will be made to the opening size given.
2. Approximate shipping weight is 5.7 lbs./sq.ft.

LOUVER SIZES

Min Panel	Max Single Panel
12"W x 19"H	96"W x 72"H

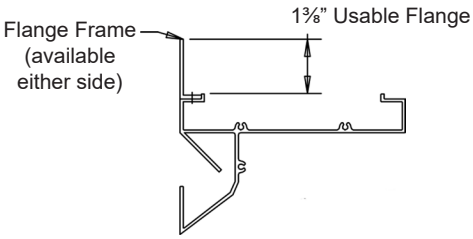

Flange Frame Available

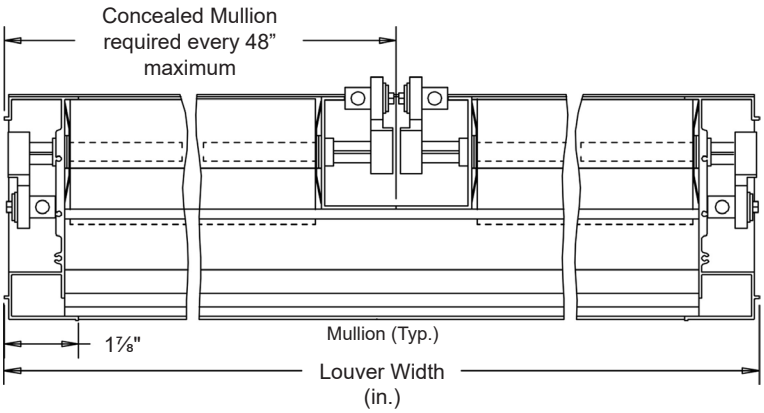

* Visible Mullion required every 96" maximum

Nominal Deductions will be made to the opening size given.

In the interest of product development, Airline Louvers reserves the right to make changes without notice.

Item #	**Qty**	Width	Height	Width	Height	**Mullion**	Type	Location		
		Opening Size		**Louver Size**			**Screens**			**Union Made**
Arch. / Eng. :						**EDR:**		**ECN:**		**Job:**
Contractor:										
Project:						**Date:**		**DWN:**		**DWG:**

1020 Prince Frederick Blvd. Suite 305 • Prince Frederick, MD 20687 • Phone: (570) 420-7079 • Fax: (570) 420-7078